Q. 1 – Q. 5 carry one mark each.

Q.1 The lecture was attended by quite _____ students, so the hall was not very _____.

(A) a few, quite (B) few, quiet (C) a few, quiet (D) few, quite

Q.2 They have come a long way in _____ trust among the users.

(A) creating (B) created (C) creation (D) create

Q.3 On a horizontal ground, the base of a straight ladder is 6 m away from the base of a vertical pole. The ladder makes an angle of 45° to the horizontal. If the ladder is resting at a point located at one-fifth of the height of the pole from the bottom, the height of the pole is ____ meters.

(A) 15 (B) 25 (C) 30 (D) 35

Q.4 If E = 10; J = 20; O = 30; and T = 40, what will be P + E + S + T?

(A) 51 (B) 82 (C) 120 (D) 164

Q.5 The CEO's decision to quit was as shocking to the Board as it was to _____.

(A) I (B) me (C) my (D) myself

Q. 6 – Q. 10 carry two marks each.

Q.6 The new cotton technology, Bollgard-II, with herbicide tolerant traits has developed into a thriving business in India. However, the commercial use of this technology is not legal in India. Notwithstanding that, reports indicate that the herbicide tolerant Bt cotton had been purchased by farmers at an average of Rs 200 more than the control price of ordinary cotton, and planted in 15% of the cotton growing area in the 2017 Kharif season.

Which one of the following statements can be inferred from the given passage?

(A) Farmers want to access the new technology if India benefits from it
(B) Farmers want to access the new technology even if it is not legal
(C) Farmers want to access the new technology for experimental purposes
(D) Farmers want to access the new technology by paying high price

Q.7 In a sports academy of 300 people, 105 play only cricket, 70 play only hockey, 50 play only football, 25 play both cricket and hockey, 15 play both hockey and football and 30 play both cricket and football. The rest of them play all three sports. What is the percentage of people who play at least two sports?

(A) 23.30 (B) 25.00 (C) 28.00 (D) 50.00

Q.8 "The increasing interest in tribal characters might be a mere coincidence, but the timing is of interest. None of this, though, is to say that the tribal hero has arrived in Hindi cinema, or that the new crop of characters represents the acceptance of the tribal character in the industry. The films and characters are too few to be described as a pattern."

What does the word 'arrived' mean in the paragraph above?

(A) reached a terminus
(B) came to a conclusion
(C) attained a status
(D) went to a place

Q.9 A square has sides 5 cm smaller than the sides of a second square. The area of the larger square is four times the area of the smaller square. The side of the larger square is _____ cm.

(A) 18.50 (B) 15.10 (C) 10.00 (D) 8.50

Q.10 P, Q, R, S and T are related and belong to the same family. P is the brother of S. Q is the wife of P. R and T are the children of the siblings P and S respectively. Which one of the following statements is necessarily FALSE?

(A) S is the aunt of R
(B) S is the aunt of T
(C) S is the sister-in-law of Q
(D) S is the brother of P

END OF THE QUESTION PAPER

Q. 1 – Q. 25 carry one mark each.

Q.1 Which one of the following is correct?

(A) $\lim_{x\to 0}\left(\frac{\sin 4x}{\sin 2x}\right)=2$ and $\lim_{x\to 0}\left(\frac{\tan x}{x}\right)=1$

(B) $\lim_{x\to 0}\left(\frac{\sin 4x}{\sin 2x}\right)=1$ and $\lim_{x\to 0}\left(\frac{\tan x}{x}\right)=1$

(C) $\lim_{x\to 0}\left(\frac{\sin 4x}{\sin 2x}\right)=\infty$ and $\lim_{x\to 0}\left(\frac{\tan x}{x}\right)=1$

(D) $\lim_{x\to 0}\left(\frac{\sin 4x}{\sin 2x}\right)=2$ and $\lim_{x\to 0}\left(\frac{\tan x}{x}\right)=\infty$

Q.2 Consider a two-dimensional flow through isotropic soil along *x* direction and *z* direction. If *h* is the hydraulic head, the Laplace's equation of continuity is expressed as

(A) $\frac{\partial h}{\partial x}+\frac{\partial h}{\partial z}=0$

(B) $\frac{\partial h}{\partial x}+\frac{\partial h}{\partial x}\frac{\partial h}{\partial z}+\frac{\partial h}{\partial z}=0$

(C) $\frac{\partial^2 h}{\partial x^2}+\frac{\partial^2 h}{\partial z^2}=0$

(D) $\frac{\partial^2 h}{\partial x^2}+\frac{\partial^2 h}{\partial x\,\partial z}+\frac{\partial^2 h}{\partial z^2}=0$

Q.3 A simple mass-spring oscillatory system consists of a mass *m*, suspended from a spring of stiffness *k*. Considering *z* as the displacement of the system at any time *t*, the equation of motion for the free vibration of the system is $m\ddot{z}+kz=0$. The natural frequency of the system is

(A) $\frac{k}{m}$ (B) $\sqrt{\frac{k}{m}}$ (C) $\frac{m}{k}$ (D) $\sqrt{\frac{m}{k}}$

Q.4 For a small value of *h*, the Taylor series expansion for $f(x+h)$ is

(A) $f(x)+hf'(x)+\frac{h^2}{2!}f''(x)+\frac{h^3}{3!}f'''(x)+...\infty$

(B) $f(x)-hf'(x)+\frac{h^2}{2!}f''(x)-\frac{h^3}{3!}f'''(x)+...\infty$

(C) $f(x)+hf'(x)+\frac{h^2}{2}f''(x)+\frac{h^3}{3}f'''(x)+...\infty$

(D) $f(x)-hf'(x)+\frac{h^2}{2}f''(x)-\frac{h^3}{3}f'''(x)+...\infty$

Q.5 A plane truss is shown in the figure (*not drawn to scale*).

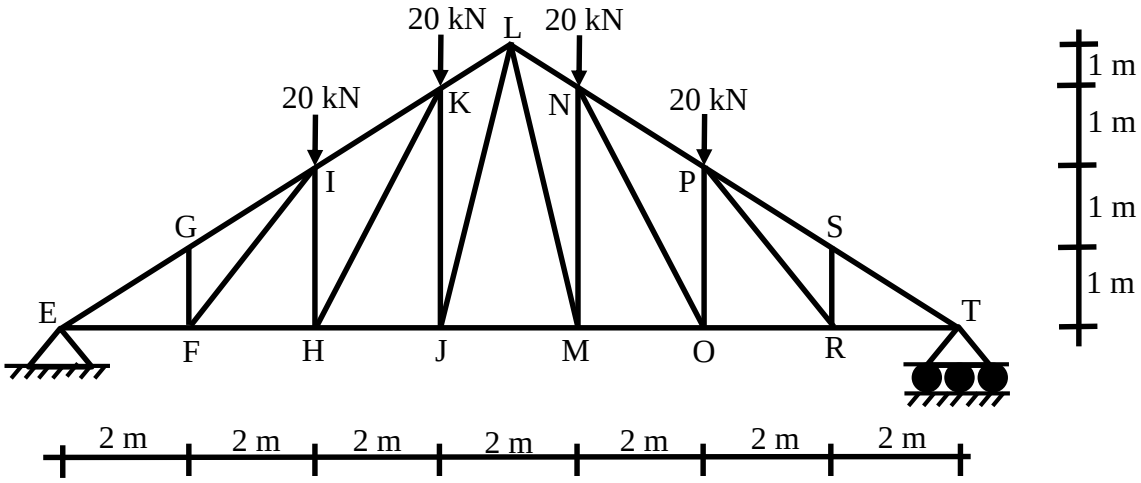

Which one of the options contains ONLY zero force members in the truss?

(A) FG, FI, HI, RS (B) FG, FH, HI, RS

(C) FI, HI, PR, RS (D) FI, FG, RS, PR

Q.6 An element is subjected to biaxial normal tensile strains of 0.0030 and 0.0020. The normal strain in the plane of maximum shear strain is

(A) Zero (B) 0.0010 (C) 0.0025 (D) 0.0050

Q.7 Consider the pin-jointed plane truss shown in the figure (*not drawn to scale*). Let R_P, R_Q, and R_R denote the vertical reactions (upward positive) applied by the supports at P, Q, and R, respectively, on the truss. The correct combination of (R_P, R_Q, R_R) is represented by

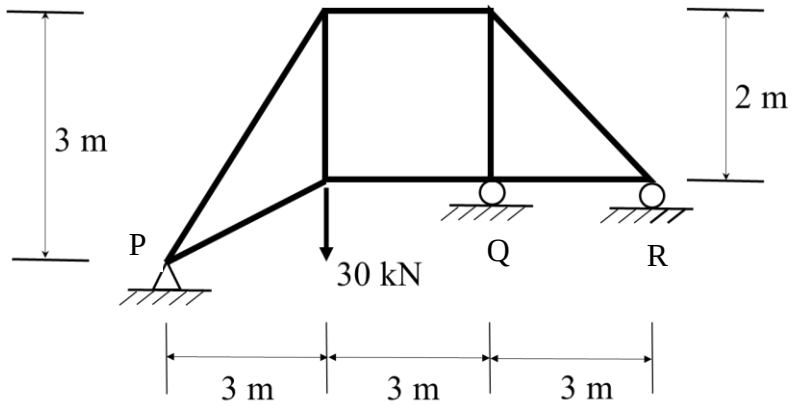

(A) (30, –30, 30) kN (B) (20, 0, 10) kN

(C) (10, 30, –10) kN (D) (0, 60, –30) kN

Q.8 Assuming that there is no possibility of shear buckling in the web, the maximum reduction permitted by IS 800-2007 in the (low-shear) design bending strength of a semi-compact steel section due to high shear is

(A) zero
(B) 25%
(C) 50%
(D) governed by the area of the flange

Q.9 In the reinforced beam section shown in the figure (*not drawn to scale*), the nominal cover provided at the bottom of the beam as per IS 456-2000, is

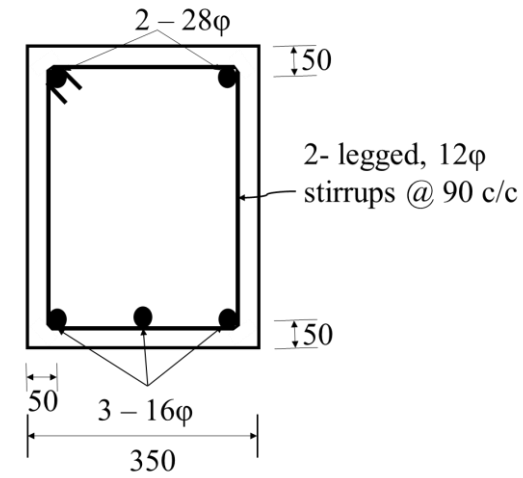

All dimensions are in mm

(A) 30 mm
(B) 36 mm
(C) 42 mm
(D) 50 mm

Q.10 The interior angles of four triangles are given below:

Triangle	Interior Angles
P	85°, 50°, 45°
Q	100°, 55°, 25°
R	100°, 45°, 35°
S	130°, 30°, 20°

Which of the triangles are ill-conditioned and should be avoided in Triangulation surveys?

(A) Both P and R
(B) Both Q and R
(C) Both P and S
(D) Both Q and S

Q.11 The coefficient of average rolling friction of a road is f_r and its grade is +G%. If the grade of this road is doubled, what will be the percentage change in the braking distance (for the design vehicle to come to a stop) measured along the horizontal (assume all other parameters are kept unchanged)?

(A) $\frac{0.01\,G}{f_r+0.02\,G} \times 100$ (B) $\frac{f_r}{f_r+0.02\,G} \times 100$

(C) $\frac{0.02\,G}{f_r+0.01\,G} \times 100$ (D) $\frac{2f_r}{f_r+0.01\,G} \times 100$

Q.12 An isolated concrete pavement slab of length L is resting on a frictionless base. The temperature of the top and bottom fibre of the slab are T_t and T_b, respectively. Given: the coefficient of thermal expansion = α and the elastic modulus = E. Assuming $T_t > T_b$ and the unit weight of concrete as zero, the maximum thermal stress is calculated as

(A) $L\alpha(T_t - T_b)$

(B) $E\alpha(T_t - T_b)$

(C) $\frac{E\alpha(T_t-T_b)}{2}$

(D) zero

Q.13 In a rectangular channel, the ratio of the velocity head to the flow depth for critical flow condition, is

(A) $\frac{1}{2}$ (B) $\frac{2}{3}$ (C) $\frac{3}{2}$ (D) 2

Q.14 If the path of an irrigation canal is below the bed level of a natural stream, the type of cross-drainage structure provided is

(A) Aqueduct (B) Level crossing (C) Sluice gate (D) Super passage

Q.15 A catchment may be idealised as a rectangle. There are three rain gauges located inside the catchment at arbitrary locations. The average precipitation over the catchment is estimated by two methods: (i) Arithmetic mean (P_A), and (ii) Thiessen polygon (P_T). Which one of the following statements is correct?

(A) P_A is always smaller than P_T
(B) P_A is always greater than P_T
(C) P_A is always equal to P_T
(D) There is no definite relationship between P_A and P_T

Q.16 A retaining wall of height H with smooth vertical backface supports a backfill inclined at an angle β with the horizontal. The backfill consists of cohesionless soil having angle of internal friction ϕ. If the active lateral thrust acting on the wall is P_a, which one of the following statements is TRUE?

(A) P_a acts at a height $H/2$ from the base of the wall and at an angle β with the horizontal
(B) P_a acts at a height $H/2$ from the base of the wall and at an angle ϕ with the horizontal
(C) P_a acts at a height $H/3$ from the base of the wall and at an angle β with the horizontal
(D) P_a acts at a height $H/3$ from the base of the wall and at an angle ϕ with the horizontal

Q.17 In a soil specimen, the total stress, effective stress, hydraulic gradient and critical hydraulic gradient are σ, σ', i and i_c, respectively. For initiation of quicksand condition, which one of the following statements is TRUE?

(A) $\sigma' \neq 0$ and $i = i_c$
(B) $\sigma' = 0$ and $i = i_c$
(C) $\sigma' \neq 0$ and $i \neq i_c$
(D) $\sigma = 0$ and $i = i_c$

Q.18 Which one of the following is a secondary pollutant?

(A) Ozone
(B) Carbon Monoxide
(C) Hydrocarbon
(D) Volatile Organic Carbon (VOC)

Q.19 For a given loading on a rectangular plain concrete beam with an overall depth of 500 *mm*, the compressive strain and tensile strain developed at the extreme fibers are of the same magnitude of 2.5×10^{-4}. The curvature in the beam cross-section (in m^{-1}, *round off to 3 decimal places*), is _____

Q.20 A completely mixed dilute suspension of sand particles having diameters 0.25, 0.35, 0.40, 0.45 and 0.50 *mm* are filled in a transparent glass column of diameter 10 *cm* and height 2.50 *m*. The suspension is allowed to settle without any disturbance. It is observed that all particles of diameter 0.35 *mm* settle to the bottom of the column in 30 *s*. For the same period of 30 *s*, the percentage removal (*round off to integer value*) of particles of diameters 0.45 and 0.50 *mm* from the suspension is _____

Q.21 The maximum number of vehicles observed in any five minute period during the peak hour is 160. If the total flow in the peak hour is 1000 vehicles, the five minute peak hour factor (*round off to 2 decimal places*) is _____

Q.22 A circular duct carrying water gradually contracts from a diameter of 30 *cm* to 15 *cm*. The figure (*not drawn to scale*) shows the arrangement of differential manometer attached to the duct.

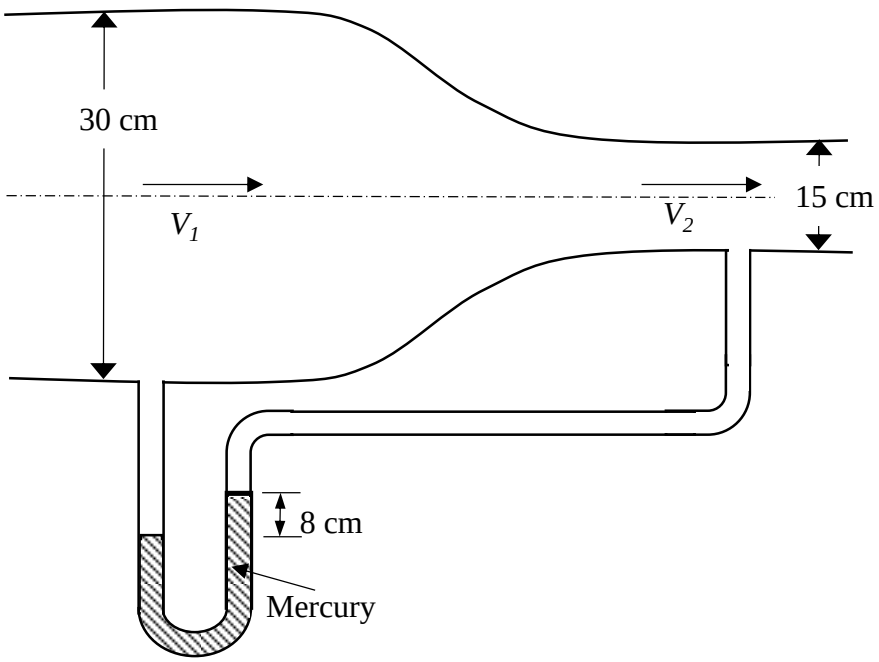

When the water flows, the differential manometer shows a deflection of 8 *cm* of mercury (*Hg*). The values of specific gravity of mercury and water are 13.6 and 1.0, respectively. Consider the acceleration due to gravity, $g = 9.81\ m/s^2$. Assuming frictionless flow, the flow rate (in m^3/s, *round off to 3 decimal places*) through the duct is _____

Q.23 The probability that the annual maximum flood discharge will exceed 25000 m^3/s, at least once in next 5 years is found to be 0.25. The return period of this flood event (in *years, round off to 1 decimal place*) is _____

Q.24 A soil has specific gravity of its solids equal to 2.65. The mass density of water is 1000 kg/m^3. Considering zero air voids and 10% moisture content of the soil sample, the dry density (in kg/m^3, *round off to 1 decimal place*) would be _____

Q.25 A concentrated load of 500 *kN* is applied on an elastic half space. The ratio of the increase in vertical normal stress at depths of 2 *m* and 4 *m* along the point of the loading, as per Boussinesq's theory, would be _____

Q. 26 – Q. 55 carry two marks each.

Q.26 Which one of the following is NOT a correct statement?

(A) The function $\sqrt[x]{x}$, (x>0), has the global maxima at $x = e$
(B) The function $\sqrt[x]{x}$, (x>0), has the global minima at $x = e$
(C) The function x^3 has neither global minima nor global maxima
(D) The function $|x|$ has the global minima at $x = 0$

Q.27 A one-dimensional domain is discretized into N sub-domains of width Δx with node numbers $i = 0,1,2,3,...,N$. If the time scale is discretized in steps of Δt, the forward-time and centered-space finite difference approximation at i^{th} node and n^{th} time step, for the partial differential equation $\frac{\partial v}{\partial t} = \beta \frac{\partial^2 v}{\partial x^2}$ is

(A) $\frac{v_i^{(n+1)} - v_i^{(n)}}{\Delta t} = \beta \left[\frac{v_{i+1}^{(n)} - 2v_i^{(n)} + v_{i-1}^{(n)}}{(\Delta x)^2} \right]$

(B) $\frac{v_{i+1}^{(n+1)} - v_i^{(n)}}{\Delta t} = \beta \left[\frac{v_{i+1}^{(n)} - 2v_i^{(n)} + v_{i-1}^{(n)}}{2\Delta x} \right]$

(C) $\frac{v_i^{(n)} - v_i^{(n-1)}}{\Delta t} = \beta \left[\frac{v_{i+1}^{(n)} - 2v_i^{(n)} + v_{i-1}^{(n)}}{(\Delta x)^2} \right]$

(D) $\frac{v_i^{(n)} - v_i^{(n-1)}}{2\Delta t} = \beta \left[\frac{v_{i+1}^{(n)} - 2v_i^{(n)} + v_{i-1}^{(n)}}{2\Delta x} \right]$

Q.28 A rectangular open channel has a width of 5 *m* and a bed slope of 0.001. For a uniform flow of depth 2 *m*, the velocity is 2 *m/s*. The Manning's roughness coefficient for the channel is

(A) 0.002 (B) 0.017 (C) 0.033 (D) 0.050

Q.29 For the following statements:

P – The lateral stress in the soil while being tested in an oedometer is always at-rest.
Q – For a perfectly rigid strip footing at deeper depths in a sand deposit, the vertical normal contact stress at the footing edge is greater than that at its centre.
R – The corrections for overburden pressure and dilatancy are not applied to measured SPT-*N* values in case of clay deposits.

The correct combination of the statements is

(A) P – TRUE; Q – TRUE; R – TRUE
(B) P – FALSE; Q – FALSE; R – TRUE
(C) P – TRUE; Q – TRUE; R – FALSE
(D) P – FALSE; Q – FALSE; R – FALSE

Q.30 Consider two functions: $x = \psi \ln \phi$ and $y = \phi \ln \psi$. Which one of the following is the correct expression for $\frac{\partial \psi}{\partial x}$?

(A) $\frac{x \ln \psi}{\ln \phi \ln \psi - 1}$ (B) $\frac{x \ln \phi}{\ln \phi \ln \psi - 1}$ (C) $\frac{\ln \phi}{\ln \phi \ln \psi - 1}$ (D) $\frac{\ln \psi}{\ln \phi \ln \psi - 1}$

Q.31 The cross-section of a built-up wooden beam as shown in the figure (*not drawn to scale*) is subjected to a vertical shear force of 8 *kN*. The beam is symmetrical about the neutral axis (N.A.) shown, and the moment of inertia about N.A. is 1.5×10^9 mm^4. Considering that the nails at the location P are spaced longitudinally (along the length of the beam) at 60 *mm*, each of the nails at P will be subjected to the shear force of

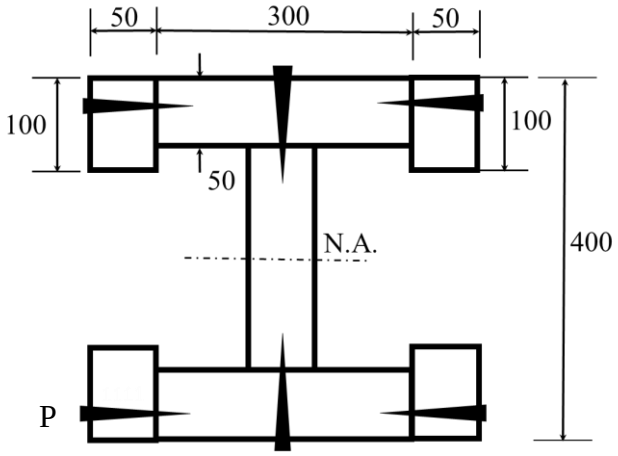

All dimensions are in *mm*

(A) 60 *N* (B) 120 *N* (C) 240 *N* (D) 480 *N*

Q.32 The rigid-jointed plane frame QRS shown in the figure is subjected to a load *P* at the joint R. Let the axial deformations in the frame be neglected. If the support S undergoes a settlement of $\Delta = \frac{PL^3}{\beta EI}$, the vertical reaction at the support S will become zero when β is equal to

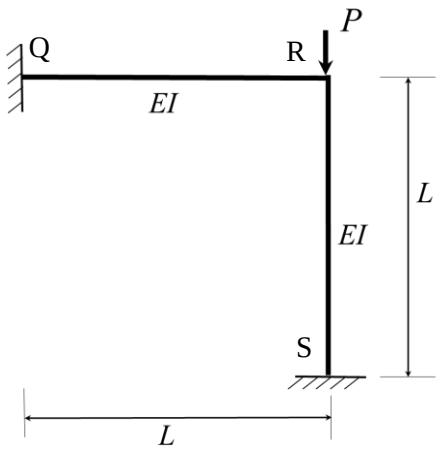

(A) 0.1 (B) 3.0 (C) 7.5 (D) 48.0

Q.33 If the section shown in the figure turns from fully-elastic to fully-plastic, the depth of neutral axis (N.A.), $\bar{y}$, decreases by

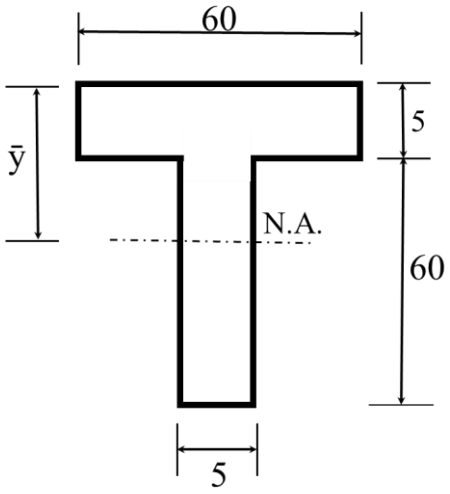

Figure not to scale
All dimensions are in mm

(A) 10.75 mm (B) 12.25 mm (C) 13.75 mm (D) 15.25 mm

Q.34 Sedimentation basin in a water treatment plant is designed for a flow rate of 0.2 m^3/s. The basin is rectangular with a length of 32 *m*, width of 8 *m*, and depth of 4 *m*. Assume that the settling velocity of these particles is governed by the Stokes' law. Given: density of the particles = 2.5 g/cm^3; density of water = 1 g/cm^3; dynamic viscosity of water = 0.01 $g/(cm.s)$; gravitational acceleration = 980 cm/s^2. If the incoming water contains particles of diameter 25 μm (spherical and uniform), the removal efficiency of these particles is

(A) 51% (B) 65% (C) 78% (D) 100%

Q.35 A survey line was measured to be 285.5 *m* with a tape having a nominal length of 30 *m*. On checking, the true length of the tape was found to be 0.05 *m* too short. If the line lay on a slope of 1 in 10, the reduced length (horizontal length) of the line for plotting of survey work would be

(A) 283.6 *m* (B) 284.5 *m* (C) 285.0 *m* (D) 285.6 *m*

Q.36 A 16 *mm* thick gusset plate is connected to the 12 *mm* thick flange plate of an I-section using fillet welds on both sides as shown in the figure (*not drawn to scale*). The gusset plate is subjected to a point load of 350 *kN* acting at a distance of 100 *mm* from the flange plate. Size of fillet weld is 10 *mm*.

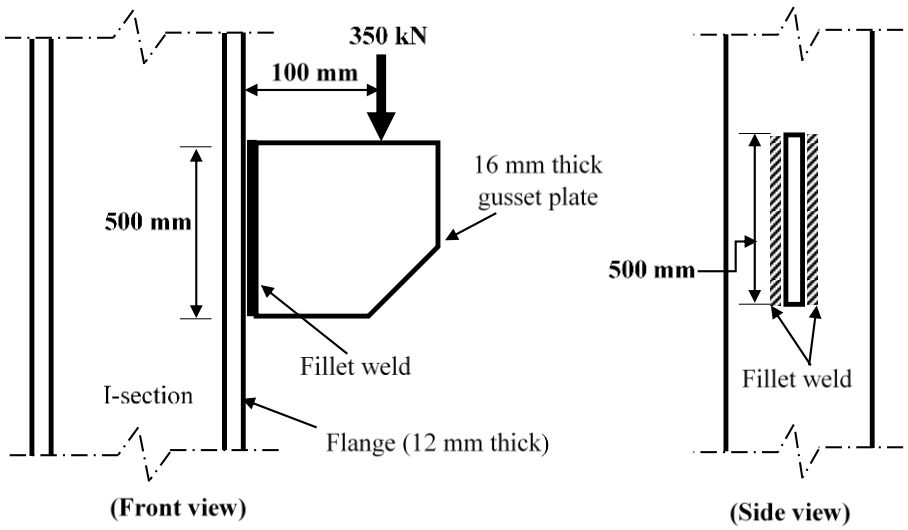

The maximum resultant stress (in *MPa, round off to 1 decimal place*) on the fillet weld along the vertical plane would be _____

Q.37 The network of a small construction project awarded to a contractor is shown in the following figure. The normal duration, crash duration, normal cost, and crash cost of all the activities are shown in the table. The indirect cost incurred by the contractor is *INR* 5000 per day.

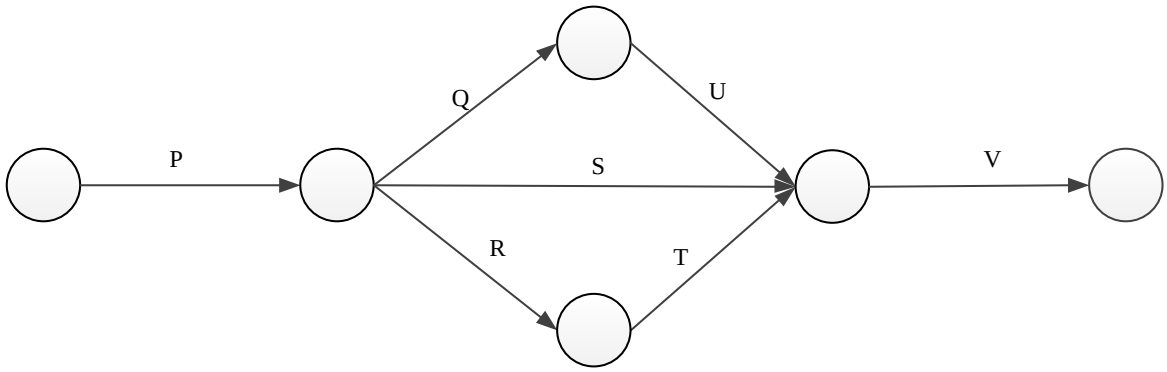

Activity	Normal Duration (*days*)	Crash Duration (*days*)	Normal Cost (*INR*)	Crash Cost (*INR*)
P	6	4	15000	25000
Q	5	2	6000	12000
R	5	3	8000	9500
S	6	3	7000	10000
T	3	2	6000	9000
U	2	1	4000	6000
V	4	2	20000	28000

If the project is targeted for completion in 16 days, the total cost (in *INR*) to be incurred by the contractor would be _____

Q.38 A box measuring 50 *cm* × 50 *cm* × 50 *cm* is filled to the top with dry coarse aggregate of mass 187.5 *kg*. The water absorption and specific gravity of the aggregate are 0.5% and 2.5, respectively. The maximum quantity of water (in *kg, round off to 2 decimal places*) required to fill the box completely is _____

Q.39 A portal frame shown in figure (*not drawn to scale*) has a hinge support at joint P and a roller support at joint R. A point load of 50 *kN* is acting at joint R in the horizontal direction. The flexural rigidity, *EI*, of each member is 10^6 kNm^2. Under the applied load, the horizontal displacement (in *mm*, *round off to 1 decimal place*) of joint R would be _____

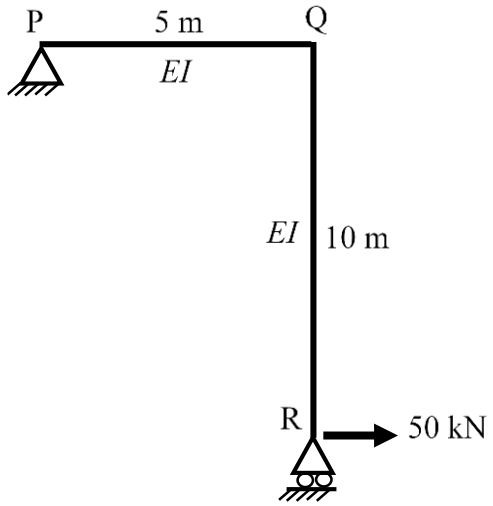

Q.40 A sample of air analysed at 0°*C* and 1 *atm* pressure is reported to contain 0.02 *ppm* (parts per million) of NO_2. Assume the gram molecular mass of NO_2 as 46 and its volume at 0°*C* and 1 *atm* pressure as 22.4 *litres per mole*. The equivalent NO_2 concentration (in *microgram per cubic meter*, *round off to 2 decimal places*) would be _____

Q.41 A 0.80 *m* deep bed of sand filter (length 4 *m* and width 3 *m*) is made of uniform particles (diameter = 0.40 *mm*, specific gravity = 2.65, shape factor = 0.85) with bed porosity of 0.4. The bed has to be backwashed at a flow rate of 3.60 m^3/min. During backwashing, if the terminal settling velocity of sand particles is 0.05 *m/s*, the expanded bed depth (in *m*, *round off to 2 decimal places*) is _____

Q.42 A wastewater is to be disinfected with 35 *mg/L* of chlorine to obtain 99% kill of micro-organisms. The number of micro-organisms remaining alive (N_t) at time *t*, is modelled by $N_t = N_o e^{-kt}$, where N_o is number of micro-organisms at $t = 0$, and *k* is the rate of kill. The wastewater flow rate is 36 m^3/h, and $k = 0.23$ min^{-1}. If the depth and width of the chlorination tank are 1.5 *m* and 1.0 *m*, respectively, the length of the tank (in *m*, *round off to 2 decimal places*) is _____

Q.43 A staff is placed on a benchmark (BM) of reduced level (RL) 100.000 *m* and a theodolite is placed at a horizontal distance of 50 *m* from the BM to measure the vertical angles. The measured vertical angles from the horizontal at the staff readings of 0.400 *m* and 2.400 *m* are found to be the same. Taking the height of the instrument as 1.400 *m*, the RL (in *m*) of the theodolite station is _____

Q.44 Consider the ordinary differential equation $x^2 \frac{d^2y}{dx^2} - 2x\frac{dy}{dx} + 2y = 0$. Given the values of $y(1) = 0$ and $y(2) = 2$, the value of $y(3)$ (round off to 1 decimal place), is _____

Q.45 Average free flow speed and the jam density observed on a road stretch are 60 *km/h* and 120 *vehicles/km*, respectively. For a linear speed-density relationship, the maximum flow on the road stretch (in *vehicles/h*) is _____

Q.46 Traffic on a highway is moving at a rate of 360 *vehicles per hour* at a location. If the number of vehicles arriving on this highway follows Poisson distribution, the probability (*round off to 2 decimal places*) that the headway between successive vehicles lies between 6 and 10 *seconds* is _____

Q.47 A parabolic vertical curve is being designed to join a road of grade +5% with a road of grade –3%. The length of the vertical curve is 400 *m* measured along the horizontal. The vertical point of curvature (VPC) is located on the road of grade +5%. The difference in height between VPC and vertical point of intersection (VPI) (in *m, round off to the nearest integer*) is _____

Q.48 Tie bars of 12 *mm* diameter are to be provided in a concrete pavement slab. The working tensile stress of the tie bars is 230 *MPa*, the average bond strength between a tie bar and concrete is 2 *MPa*, and the joint gap between the slabs is 10 *mm*. Ignoring the loss of bond and the tolerance factor, the design length of the tie bars (in *mm, round off to the nearest integer*) is _____

Q.49 The hyetograph of a storm event of duration 140 *minutes* is shown in the figure.

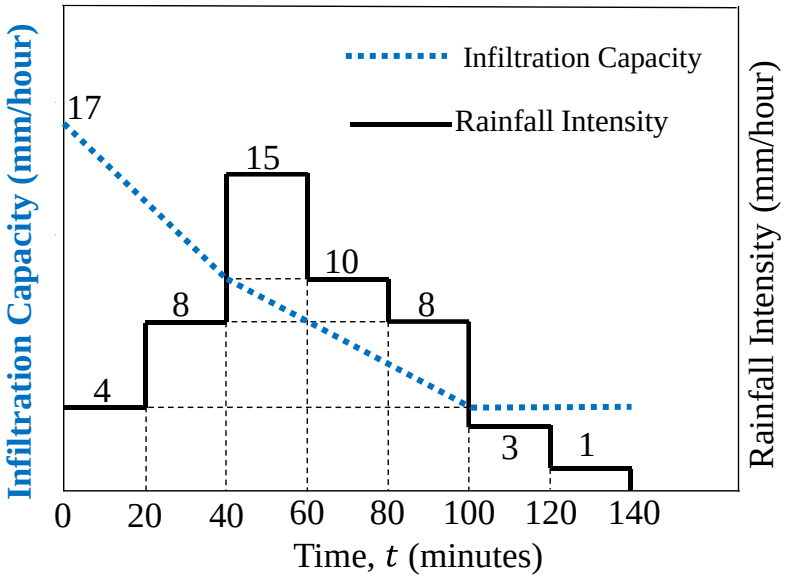

The infiltration capacity at the start of this event ($t = 0$) is 17 *mm/hour*, which linearly decreases to 10 *mm/hour* after 40 *minutes* duration. As the event progresses, the infiltration rate further drops down linearly to attain a value of 4 *mm/hour* at $t = 100$ *minutes* and remains constant thereafter till the end of the storm event. The value of the infiltration index, φ (in *mm/hour, round off to 2 decimal places*), is _____

Q.50 Two water reservoirs are connected by a siphon (running full) of total length 5000 *m* and diameter of 0.10 *m*, as shown below (*figure not drawn to scale*).

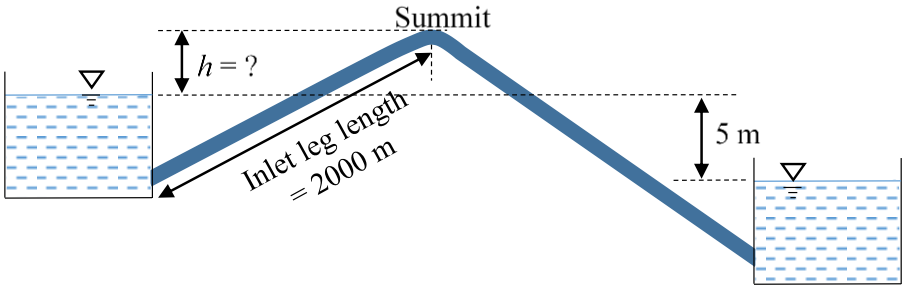

The inlet leg length of the siphon to its summit is 2000 *m*. The difference in the water surface levels of the two reservoirs is 5 *m*. Assume the permissible minimum absolute pressure at the summit of siphon to be 2.5 *m* of water when running full. Given: friction factor f = 0.02 throughout, atmospheric pressure = 10.3 *m* of water, and acceleration due to gravity g = 9.81 m/s^2. Considering only major loss using Darcy-Weisbach equation, the maximum height of the summit of siphon from the water level of upper reservoir, h (in *m, round off to 1 decimal place)* is _____

Q.51 Consider a laminar flow in the *x*-direction between two infinite parallel plates (Couette flow). The lower plate is stationary and the upper plate is moving with a velocity of 1 *cm/s* in the *x*-direction. The distance between the plates is 5 *mm* and the dynamic viscosity of the fluid is 0.01 *N-s/m*^{2}. If the shear stress on the lower plate is zero, the pressure gradient, $\frac{\partial p}{\partial x}$, (in *N/m*^{2} *per m, round off to 1 decimal place*) is _____

Q.52 A reinforced concrete circular pile of 12 *m* length and 0.6 *m* diameter is embedded in stiff clay which has an undrained unit cohesion of 110 *kN/m*^{2}. The adhesion factor is 0.5. The Net Ultimate Pullout (uplift) Load for the pile (in *kN, round off to 1 decimal place*) is _____

Q.53 A granular soil has a saturated unit weight of 20 *kN/m*^{3} and an effective angle of shearing resistance of 30°. The unit weight of water is 9.81 *kN/m*^{3}. A slope is to be made on this soil deposit in which the seepage occurs parallel to the slope up to the free surface. Under this seepage condition for a factor of safety of 1.5, the safe slope angle (in *degree, round off to 1 decimal place*) would be _____

Q.54 A 3 *m* × 3 *m* square precast reinforced concrete segments to be installed by pushing them through an existing railway embankment for making an underpass as shown in the figure. A reaction arrangement using precast PCC blocks placed on the ground is to be made for the jacks.

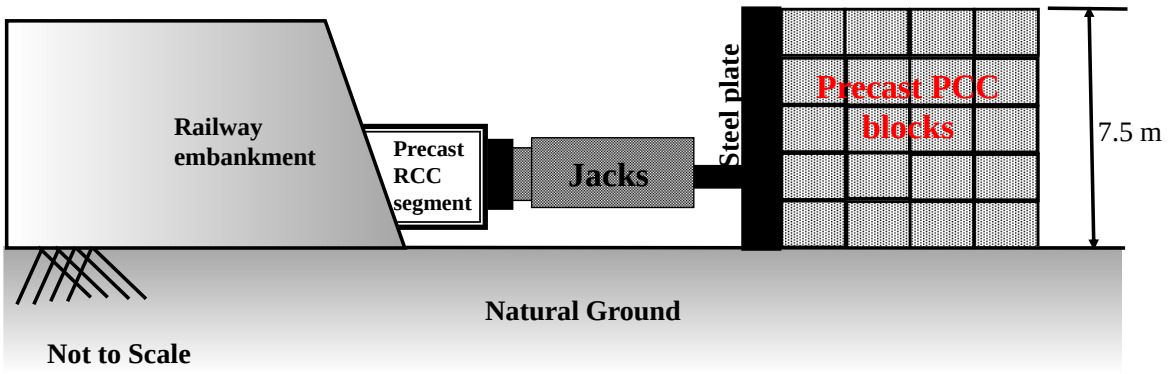

At each stage, the jacks are required to apply a force of 1875 *kN* to push the segment. The jacks will react against the rigid steel plate placed against the reaction arrangement. The footprint area of reaction arrangement on natural ground is 37.5 *m*^{2}. The unit weight of PCC block is 24 *kN/m*^{3}. The properties of the natural ground are: c = 17 *kPa*; ϕ = 25° and γ = 18 *kN/m*^{3}. Assuming that the reaction arrangement has rough interface and has the same properties that of soil, the factor of safety (*round off to 1 decimal place*) against shear failure is _____

Q.55 A square footing of 4 *m* side is placed at 1 *m* depth in a sand deposit. The dry unit weight (γ) of sand is 15 kN/m^3. This footing has an ultimate bearing capacity of 600 *kPa*. Consider the depth factors: $d_q = d_\gamma = 1.0$ and the bearing capacity factor: $N_\gamma = 18.75$. This footing is placed at a depth of 2 *m* in the same soil deposit. For a factor of safety of 3.0 as per Terzaghi's theory, the safe bearing capacity (in *kPa*) of this footing would be _____

END OF THE QUESTION PAPER

Q.No.	Type	Section	Key	Marks
1	MCQ	GA	C	1
2	MCQ	GA	A	1
3	MCQ	GA	C	1
4	MCQ	GA	C	1
5	MCQ	GA	B	1
6	MCQ	GA	B	2
7	MCQ	GA	B	2
8	MCQ	GA	C	2
9	MCQ	GA	C	2
10	MCQ	GA	B	2
1	MCQ	CE	A	1
2	MCQ	CE	C	1
3	MCQ	CE	B	1
4	MCQ	CE	A	1
5	MCQ	CE	D	1
6	MCQ	CE	C	1
7	MCQ	CE	A	1
8	MCQ	CE	A	1
9	MCQ	CE	A	1
10	MCQ	CE	D	1
11	MCQ	CE	A	1
12	MCQ	CE	D	1
13	MCQ	CE	A	1

Q.No.	Type	Section	Key	Marks
14	MCQ	CE	D	1
15	MCQ	CE	D	1
16	MCQ	CE	C	1
17	MCQ	CE	B	1
18	MCQ	CE	A	1
19	NAT	CE	0.001 to 0.001	1
20	NAT	CE	100 to 100	1
21	NAT	CE	0.51 to 0.53	1
22	NAT	CE	0.078 to 0.085	1
23	NAT	CE	17.8 to 18.0	1
24	NAT	CE	2086.6 to 2095.0	1
25	NAT	CE	4 to 4	1
26	MCQ	CE	B	2
27	MCQ	CE	A	2
28	MCQ	CE	B	2
29	MCQ	CE	A	2
30	MCQ	CE	D	2
31	MCQ	CE	C	2
32	MCQ	CE	C	2
33	MCQ	CE	C	2
34	MCQ	CE	B	2
35	MCQ	CE	A	2
36	NAT	CE	78.0 to 78.2 OR 105.3 to 105.5	2

Q.No.	Type	Section	Key	Marks
37	NAT	CE	149500 to 149500	2
38	NAT	CE	50.50 to 51.20	2
39	NAT	CE	24.9 to 25.1	2
40	NAT	CE	41.00 to 41.10	2
41	NAT	CE	1.15 to 1.25	2
42	NAT	CE	7.95 to 8.15	2
43	NAT	CE	100 to 100	2
44	NAT	CE	5.9 to 6.1	2
45	NAT	CE	1800 to 1800	2
46	NAT	CE	0.17 to 0.19	2
47	NAT	CE	10 to 10 OR -10 to -10	2
48	NAT	CE	700 to 700	2
49	NAT	CE	7.00 to 7.30	2
50	NAT	CE	5.7 to 5.9	2
51	NAT	CE	7.9 to 8.1	2
52	NAT	CE	1240.0 to 1250.0	2
53	NAT	CE	10.8 to 11.3	2
54	NAT	CE	1.8 to 2.1	2
55	NAT	CE	240 to 240 OR 250 to 250 OR 270 to 270	2